This drawing is valid for commercial purposes only and must not be copied, disclosed or used without our permission

LASHING EQUIPMENT.COM by TEC CONTAINER Since 1976

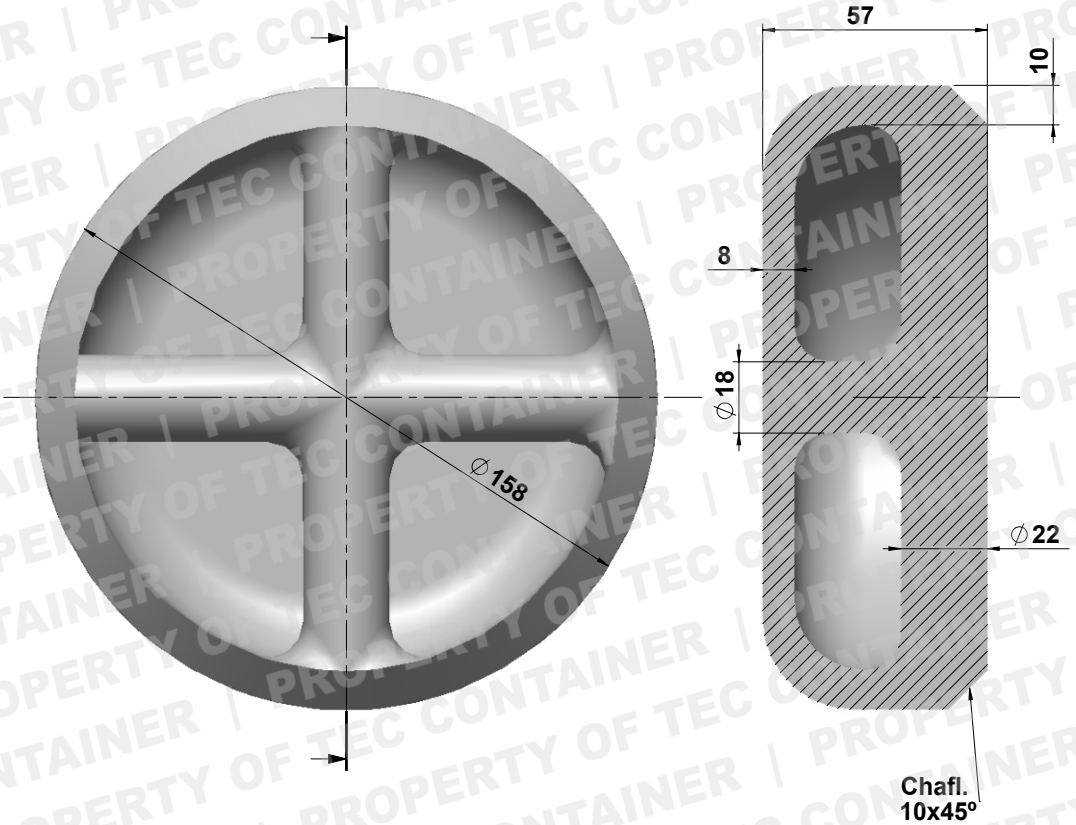

Material:	Cast Steel
Weight:	3.6 Kg
SWL	91 kN
BL	182 kN

TEC CONTAINER S.A.
+ 34 91 302 16 38
lashingequipment.com
teccontainer.com
info@lashingequipment.com

TEC CONTAINER

Description:

CROSS BAR LASHING FOUNDATION

Reference: **FA-67-H**

Real pieces might have variations in details such as weight and sizes